SB160CP0

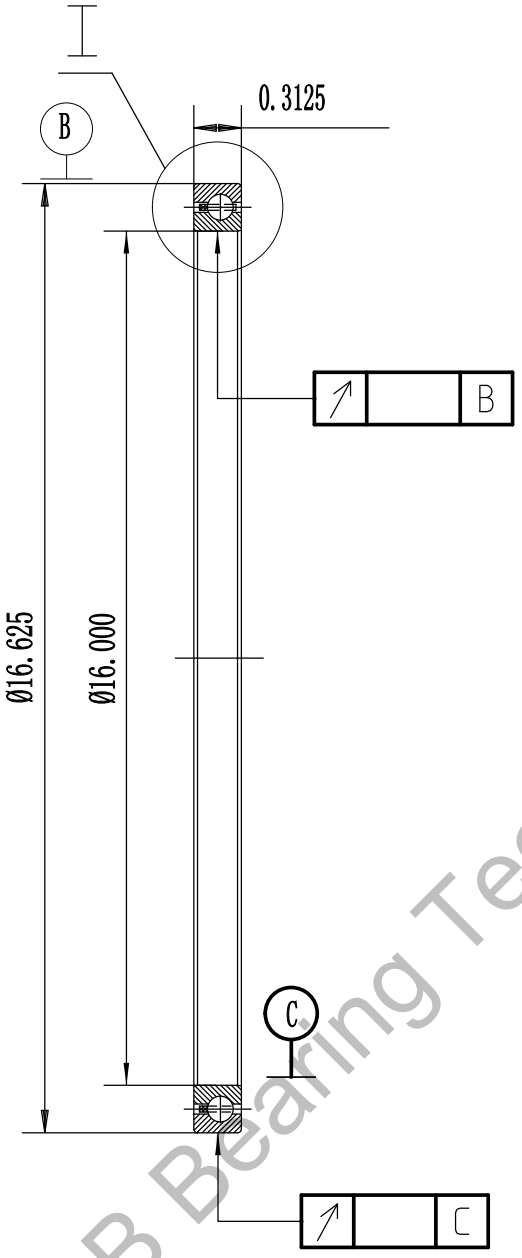


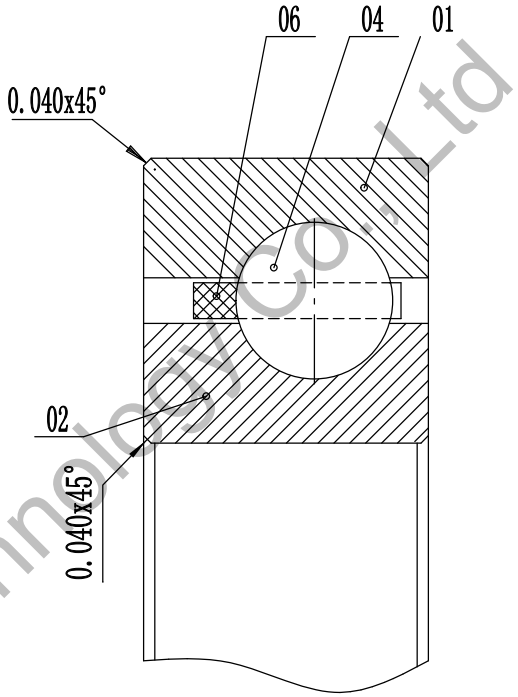


1.Radial clearance:

| No. | designation | qty | material | unit weight (lbs) | total weight (lbs) | remark |
|---|---|---|---|---|---|---|
| 06 | cage | | nylon | | | |
| 04 | steel ball | | AISI 52100 Steel | | | |
| 02 | inner ring | 1 | AISI 52100 Steel | | | |
| 01 | outer ring | 1 | AISI 52100 Steel | | | |


Luoyang JCB Bearing Technology Co., Ltd
Contact information
Company Address : No.285 Fenghua road, Luoyang, Henan,China.
Postal code : 471000
Phone : 0086-379-68611678 Fax : 0086-379-68611679
E-mail: sales@jcb-bearing.com
Reserved E-mail: sales@thinsectionbearings.com
Website: www.jcb-bearing.com
www.thinsectionbearings.com


THIN SECTION BEARING

SB160CP0

| weight(lbs) | |
|---|---|
| 1.20 | —— |

total page 1 | page 1

Luoyang JCB Bearing Technology Co., Ltd

Luoyang JCB Bearing Technology Co., Ltd