K20008CP0

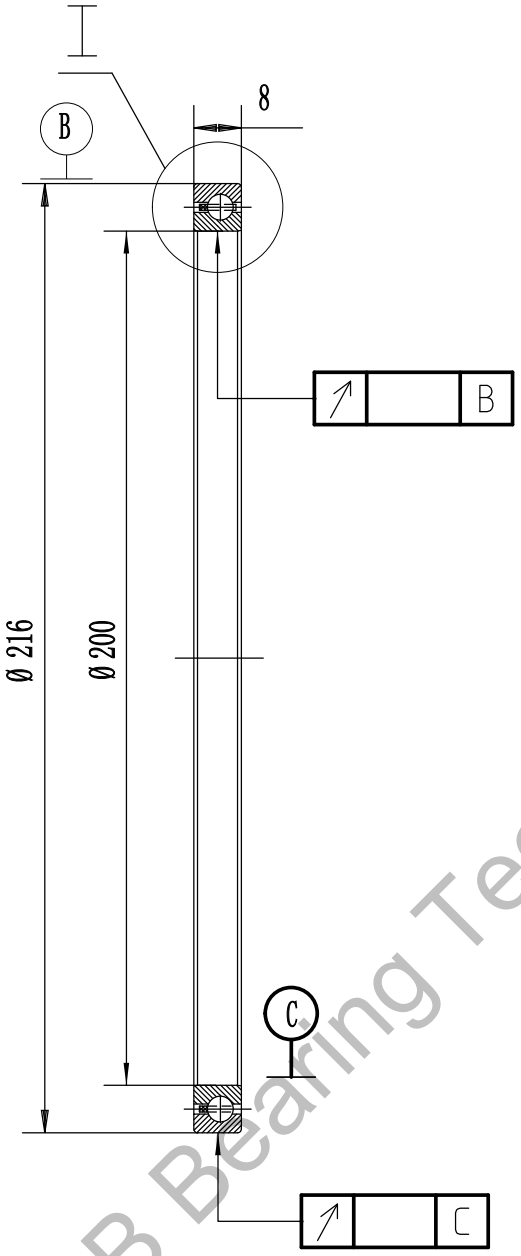

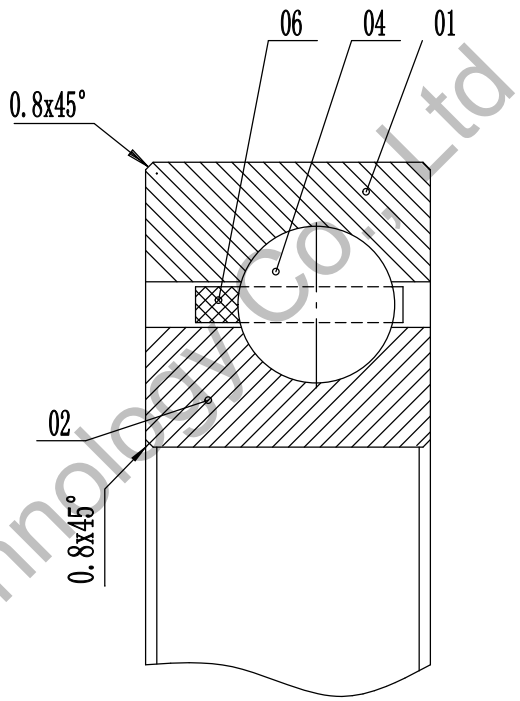

1.Radial clearance:

No.	designation	qty	material	unit weight (kg)	total weight (kg)	remark
06	cage		nylon			
04	steel ball		AISI 52100 Steel			
02	inner ring	1	AISI 52100 Steel			
01	outer ring	1	AISI 52100 Steel			

Luoyang JCB Bearing Technology Co., Ltd
Contact information
Company Address : No.285 Fenghua road, Luoyang, Henan,China.
Postal code : 471000
Phone : 0086-379-68611678 Fax : 0086-379-68611679
E-mail: sales@jcb-bearing.com
Reserved E-mail: sales@thinsectionbearings.com
Website: www.jcb-bearing.com
www.thinsectionbearings.com

THIN SECTION BEARING

K20008CP0

			weight(kg)	
			0.22	——
total page 1			page 1	

Luoyang JCB Bearing Technology Co., Ltd

Luoyang JCB Bearing Technology Co., Ltd